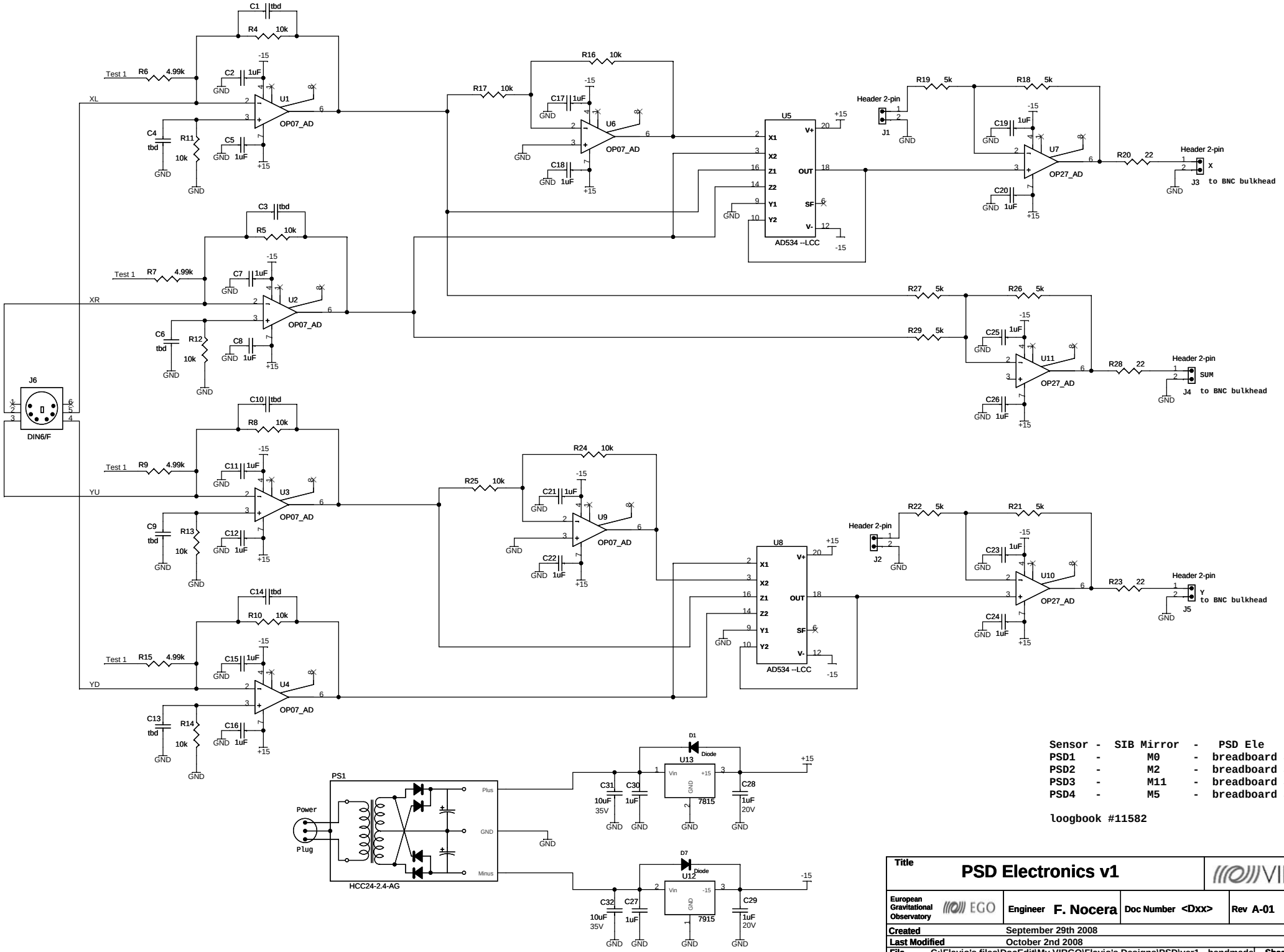

Sensor - SIB Mirror - PSD Ele
PSD1 - M0 - breadboard SN1
PSD2 - M2 - breadboard SN2
PSD3 - M11 - breadboard SN3
PSD4 - M5 - breadboard SN4

loogbook #11582

Title	**PSD Electronics v1**			VIRGO
European Gravitational Observatory EGO	Engineer **F. Nocera**	Doc Number <Dxx>	Rev A-01	Size A4
Created	September 29th 2008			
Last Modified	October 2nd 2008			
File	C:\Flavio's files\DocEdit\My VIRGO\Flavio's Designs\PSD\ver1 --handmade		Sheet 1 of 1	